JRC

ALPHATRON Marine

Autopilot

AlphaPilot

Simple, scalable and smart steering

www.jrc.am

Features

Our new adaptive autopilot features a 5-inch touch display with the hardware and software based on our uniform product philosophy, creating a consistent bridge and operational approach. The advanced track steering technology contributes to safe and efficient operation, defined by its simplicity in usage.

- 5-inch color LCD touch display
- Modular and most flexible system
- Intuitive user experience
- Uniform product philosophy
- Fully self adjusting
- Adaptive control technology
- High quality hardware design
- Heading monitor system functionality
- Fuel saving
- Various operating modes

Thanks to our experience and feedback of our customers and engineers, we designed our new AlphaPilot as a modular system with standard components that makes it easy to install, commission and to maintain. The new AlphaPilot had to be deployable as a small system as heading control system up to an advanced and complex autopilot system with multiple positions and to control main steering. The result is a system consists of following building blocks:

v AlphaPilot control panel
v MCU box (Main Control Unit)
v MCU MS box (Main Control Unit Main Steering)
v Mode switches, tillers, hand wheels and rudder feedback units

With only these components, one is able to design a system for the demands of the customers.

Fully self-adjusting

The AlphaPilot is a modular, type approved heading control system designed to fit vessels of any size, including high speed crafts. This modern and technologically advanced control unit is intended to reduce the operator's workload, increase the vessel motion efficiency and improve operational safety. The AlphaPilot is easy to install and has a fully self-adjusting 'auto-tune' algorithm which automatically estimates ships' dynamics and allows it to easily adapt control settings, rudder gain and counter rudder as required to continually provide the best possible steering performance.

Tillers & Switches

The tillers are required for steering and switches for selecting steering modes. As an additional safety feature, the tiller in command will lit. All tillers and switches have dimmer and mute buttons. The modules have an aluminum base fitted with a dedicated PCB and a splash-proof film coating on the front. The modules are connected via CAN bus for communicating with the main control unit.

Single rudder hand wheel

Double rudder hand wheel

2 Position mode switch

3 Position mode switch

Non-follow-up (NFU)

Follow-up (FU) tiller

Follow up (FU) tiller ROT

Follow up (FU) tiller S/I

Features	Hand wheel	2 pos. mode switch	3 pos. mode switch	NFU	FU tiller	FU tiller ROT	FU tiller S/I
FU mode (take over)	v		v		v	v	v
Central dimmer buttons	v	v	v	v	v	v	v
Buzzer disable button	v	v	v	v	v	v	v
ROT mode						v	
SYNC mode							v
INDEP mode							v
NFU mode (take over)		v	v	v			
Auto/Follow up mode		v	v				

Modes of operation

The AlphaPilot is easy to operate via an intuitive 5-inch color touchscreen display which will give the operator a clear presentation of information. The user-friendly menu and parameters can be accessed and changed by using the touch screen, rotary button or, in case of the AlphaTrackPilot, multi-functional joystick.

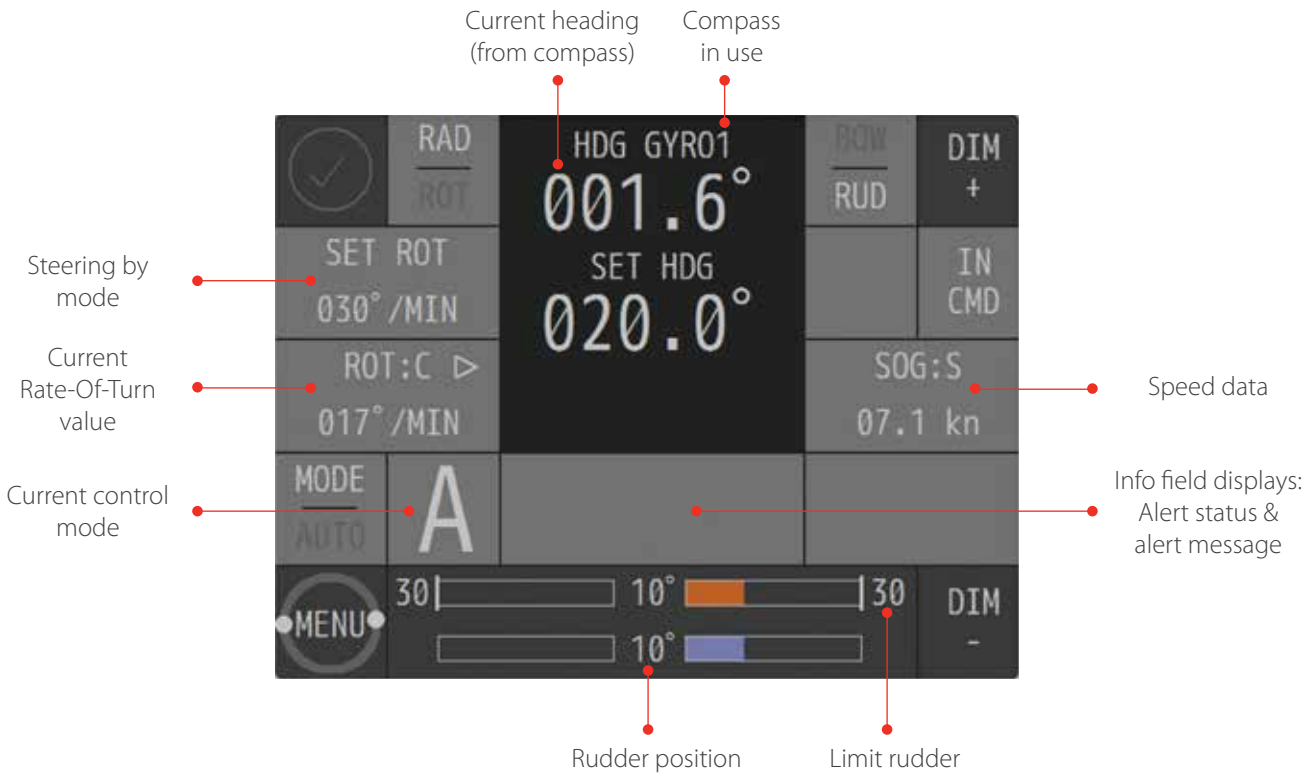

	Mode	Explanation
S	Standby	AlphaPilot is in stand-by or manual mode and does not control steering or rudders as control is overridden
A	Auto	Auto mode or automatic heading control activates the autopilot and steers the vessel to the reference course. When wind/current will push the vessel off course, the AlphaPilot will counteract. 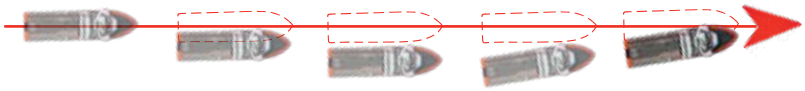
D	Dodge	The dodge mode is a short-term switchover from auto mode to the manual rudder control.
O	Override	The overide mode will give intentional fast change-over from automatic to temporary manual FU steering from external FU wheel or FU Tiller.
C	CTS Pilot	Course to steer or CTS mode is an estimated course that a vessel should steer in order to arrive at a waypoint or bearing and stay on ground track. 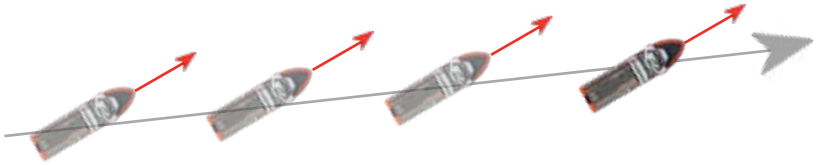
R	ROT mode	In this mode the AlphaPilot is switched over to manual ROT (rate-of-turn) steering via a knob on the control panel or activated on an external FU/ROT tiller. This mode is also known as 'River mode'.
T	Track	Track control mode (also referred to as "track steering"), combines an ECDIS with the autopilot. The navigator can program a voyage plan into the ECDIS that contains one or more tracks. 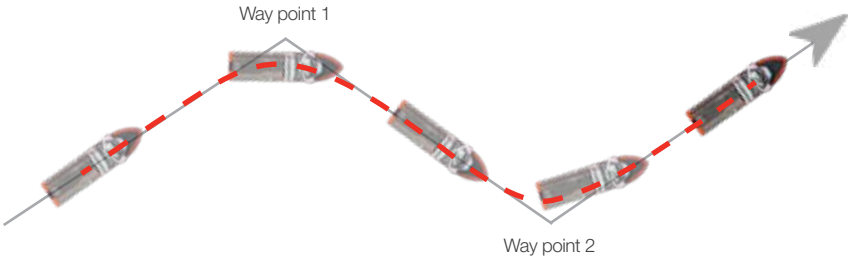
A	Auto low speed heading control	The AlphaPilot can operate in automatic low speed heading control mode, using one or two tunnel thrusters in "AUTO" control mode.

Control panel

The AlphaPilot control panel is intended to control and for monitoring of operation, setting of required ships' heading or rudder angle, selection of operating modes. The control panel is equipped with a high resolution color display, displaying information such as heading, current setting, mode and alarms. The operator can use touch screen and rotating knob to set the necessary parameters. All menus and functions are the same for every language. Other available control panels are the AlphaTrackPilot MFM and the AlphaPilot MFS.

Control panels

3104.0648 AlphaPilot MFM GY
3104.0650 Alphapilot MFM BK
3104.0692 AlphaTrackPilot MFM GY
3104.0694 AlphaTrackPilot MFM BK
3104.0718 AlphaPilot MFS GY
3104.0720 AlphaPilot MFS BK

MCU Box

The control panel is connected to the Main Control Unit box. This box is the central aggregation unit to connect all navigational sensors but also needed for connection to the steering system or to the steering gear. These control boxes offer multiple terminals to connect all peripherals and will become the heart of the steering system on board of the vessel. This is also the number one benefit of this system, no additional junction boxes or steering amplifiers are needed for installation of the AlphaPilot system. Depending on system needs, the following is available:

- MCU box (Main Control Unit)
- MCU MS box (Main Control Unit Main Steering)

MCU box (Main Control Unit box)

MCU MS box (Main Control Unit Main Steering box)

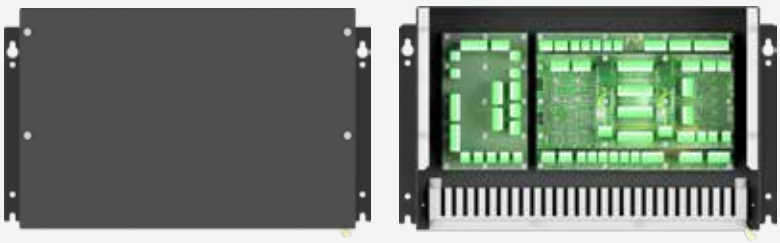

Besides size, the main difference between a MCU box and the MCU MS box is that the MCU box will be connected to a steering system while the MCU MS box is directly connected to the steering gear.

Stearing gear interfaces

The AlphaPilot MCU box and the MCU MS box is provided with multiple terminals to connect to different steering gear manufacturers. Also, the MCU boxes are provided with multiple terminals to connect all navigational sensors (GPS, gyrocompass, log, VDR, ECDIS/ECS, magnetic compass). The sensor data, among others, speed, heading and course will be used by the AlphaPilot to dynamically calculate and adjust the steering.

Terminals to connect different steering gear interfaces:

Proportional valves
- 4-20mA control signal
- 0-10V control signal
- +/-10V control signal
- Danfoss

Solenoid valves
Bang-bang, 24V DC

Proportional bow thrusters control
- 0-10V, +/-10V
- 4-20mA control signal

Proportional rudder control
Steering gears with follow-up steering control system
- 0-10V, +/-10V
- 4-20mA control signal

Rudder feedback units

The rudder feedback units consist of aluminum housing and are available as medium or heavy-duty versions. The output can be connected to the analog module or directly to the MCU box. The rudder feedback units contain a potentiometer, which is proportional to the rudder angle. Next to this, the heavy-duty version contains additional limit switches.

The rudder feedback units can be mechanically coupled to the rudder post by chain or a transmission link. The continuously transmitted accurate rudder angle data will be received by the analog interface. It converts the analog signal to a digital Modbus and IEC61162-1 signal and can be transmitted to any AlphaLine Repeater display capable of displaying graphical rudder information.

Accessories

- Rudder feedback unit HD (with limit switches)
- Rudder feedback unit MD
- Linkage Transmission for Rudder Feedback Unit
- Chain Transmission for Rudder Feedback Unit
- IP56 kit for display

Your choices

- AlphaPilot (Grey/Black)
- AlphaTrackPilot (Grey/Black)
- Main Control Unit
- Main Control Unit - Main Steering
- Additional Control Unit
- Additional Control Unit - Main Steering
- Mode Switch 2 Positions (Grey/Black)
- Mode Switch 3 Positions (Grey/Black)
- FU Tiller (Grey/Black)
- FU Tiller Sync/Indep (Grey/Black)
- FU Tiller ROT (Grey/Black)
- NFU Tiller (Grey/Black)
- Hand wheel Single Rudder (Grey/Black)
- Hand wheel Twin Rudder (Grey/Black)

System diagram

No vessel is the same and different setup may be required by taking single rudder, twin rudder, bow thruster and multi position steering options into account. The AlphaPilot can be used in various configurations. Below two example diagrams of the many options you can choose.

Single rudder, only Alphapilot #1

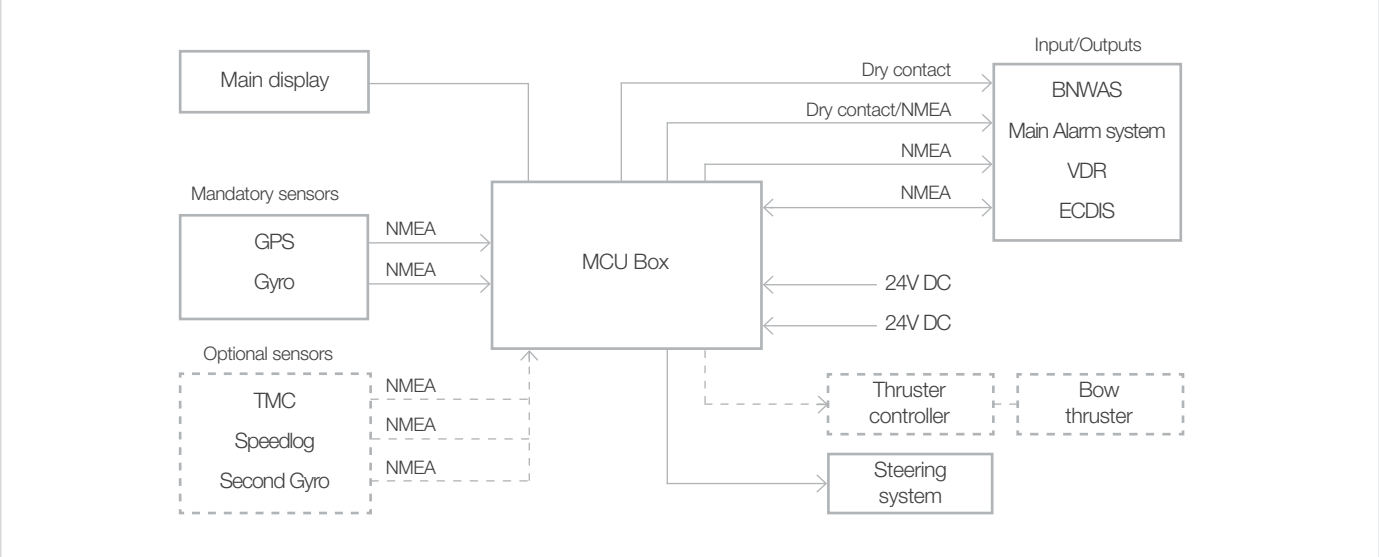

Twin rudder, multiple position

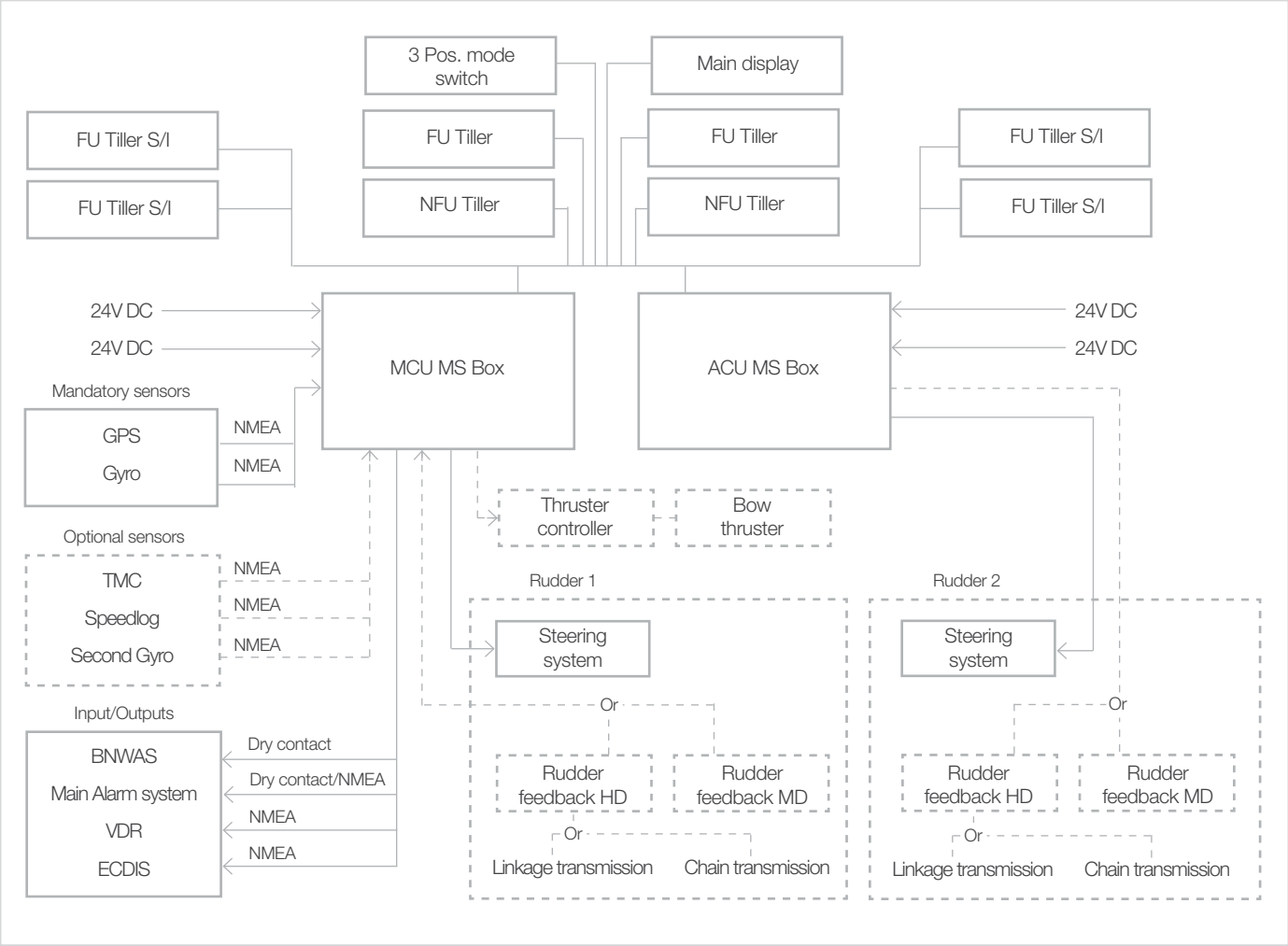

Tech Specs

FU Tiller RoHS

3104.0674 GY Weight 0.8 kg (1.76 lbs)
3104.0676 BK Weight 0.8 kg (1.76 lbs)

FU Tiller ROT RoHS

3104.0682 GY Weight 0.8 kg (1.76 lbs)
3104.0684 BK Weight 0.8 kg (1.76 lbs)

FU Tiller Sync/Indep RoHS

3104.0678 GY Weight 0.8 kg (1.76 lbs)
3104.0680 BK Weight 0.8 kg (1.76 lbs)

NFU Tiller RoHS

3104.0668 GY Weight 0.8 kg (1.76 lbs)
3104.0670 BK Weight 0.8 kg (1.76 lbs)

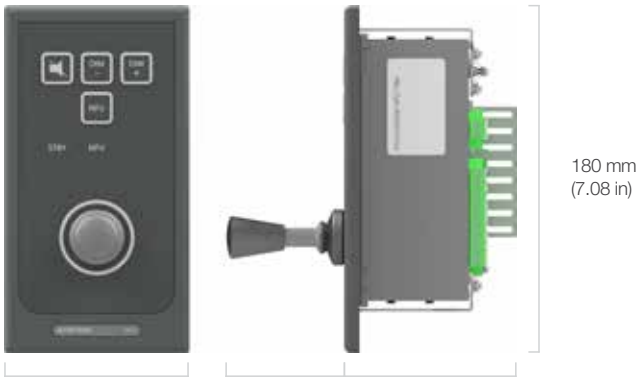

Mode Switch 2 Pos RoHS

3104.0660 GY Weight 0.8 kg (1.76 lbs)
3104.0662 BK Weight 0.8 kg (1.76 lbs)

Mode Switch 3 Pos RoHS

3104.0664 GY Weight 0.8 kg (1.76 lbs)
3104.0666 BK Weight 0.8 kg (1.76 lbs)

Hand wheel RoHS

3104.0700/04 SR/TR, GY Weight 1.8 kg (3.97 lbs)
3104.0702/06 SR/TR, BK Weight 1.8 kg (3.97 lbs)

Control Panel RoHS

3104.0648 GY Weight 1.2 kg (2.65 lbs)
3104.0650 BK Weight 1.2 kg (2.65 lbs)

MCU Box RoHS

3104.0652 MCU Box Weight 3.5 kg (7.72 lbs)
3104.0656 ACU Box Weight 3.5 kg (7.72 lbs)

MCU MS Box RoHS

3104.0654 MCU MS Box Weight 5.5 kg (12.13 lbs)
3104.0658 ACU MS Box Weight 5.5 kg (12.13 lbs)

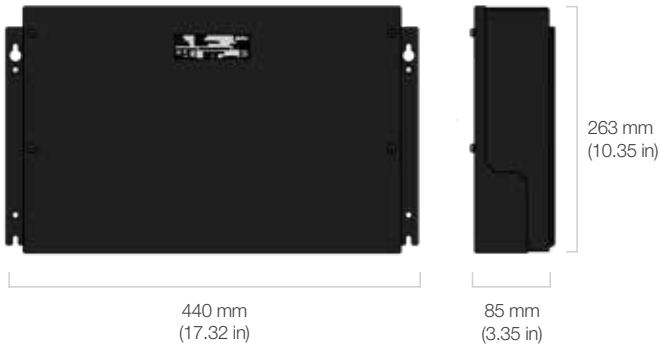

RFU HD RoHS

3109.0194 Weight 6 kg (13.22 lbs)

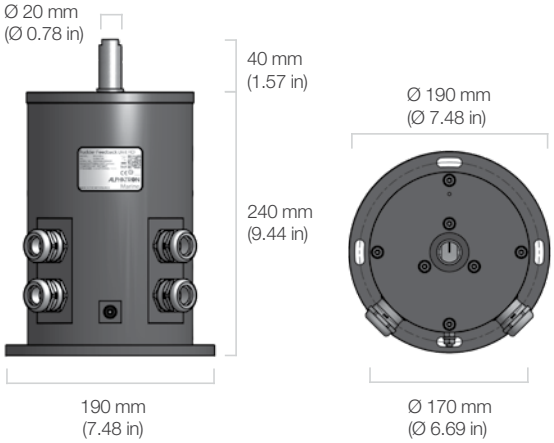

RFU MD RoHS

3109.0196 Weight 4.2 kg (9.25 lbs)

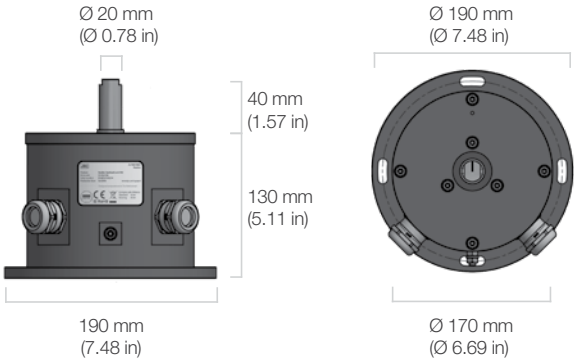

jrc.am

Centers of Excellence

Houston, Rotterdam, Singapore, Tokyo

Product and/or specifications could change without notice

© All rights reserved, JRC/AM -18.01/153/1